Panel Socket - insulated

BNC 75 Ohm

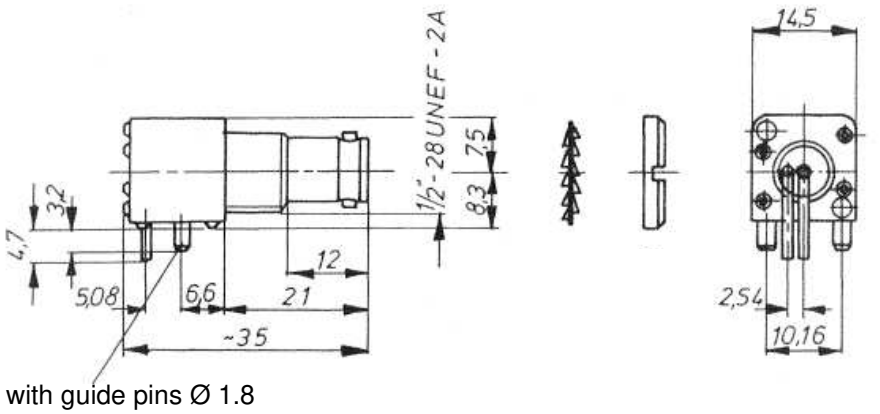

with guide pins Ø 1.8

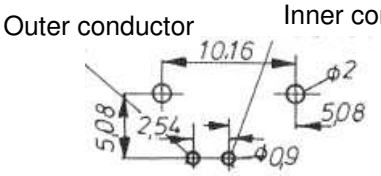

PCB holes

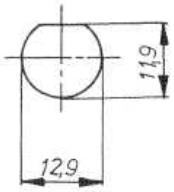

Mounting holes

Mounting panels ≤ 5 mm
without serrated washer ≤ 6 mm

Insulated,
Mounting in printed circuits – also with capacitive decoupling

Accessories (extra order): Socket wrench Part-No. 90-1108-1808

Slotted Nut with colour ring Part-No. 2-2994-2494 (black) and other colours

Capacity after assembly between the cable shield and housing potential for removing RF-interference levels and EMI reduction.	**Part Number**
9400 pF	1-3841-2145
without	1-3702-2145

DAMAR & HAGEN